SWS-230014

Intel's view on possible Rel-19 package

Intel

© 3GPP 2023

Outline

- Intel's view on possible Rel-19 package
  - Ten prospective study items
  - No specific priority order
- Motivation slides

© 3GPP 2023

Overall View on Rel-19 Content

S.NO.	Title	Brief Description and Key Objectives	Related Stage-1 Study/Work Item	Lead Stage-2 WG	RAN dependencies	Other WG dependencies
1.	**Integrated Sensing and Communications** (See slide 8 for more details)	5G system support for NR-based sensing capabilities to get information about characteristics of the environment and/or objects within the environment (e.g., shape, size, orientation, speed, location, distances or relative motion between objects, etc.) using NR RF signals. **Key Work Tasks includes defining -** 1. Overall architecture and function enhancement to support new sensing service. 2. Basic functionality and E2E procedure for Sensing service exposure, Discovery and selection of the sensing entities, Authorization, Sensing control parameter generation and provisioning, related QoS/Policy enhancement. 3. Enhancements for Non-3GPP sensing	Yes, TR 22.837	SA2	Yes, Major	SA3 for security, SA5 for charging
2.	**Edge Computing Phase 3** (See slide 9 for more details)	Further 5G system enhancement for support of Edge Computing. **Key Work Tasks includes defining -** 1. Further support for the case where there is no connectivity between the local Data Network and the central Data Network 2. Support for additional EAS (re)discovery criteria (e.g. based on EAS load, EAS computing capacity, etc.) 3. Support of Edge Computing in the ETSUN scenario (i.e. in presence of Intermediate SMFs) 4. Localized control of Edge access (e.g. EAS (re)discovery/(re)selection, local traffic routing influence, local exposure, etc.) with less impact to existing 5GC network elements (i.e. AMF, SMF).	No	SA2	No	SA3 for security, SA5 for charging (for WT#4)

© 3GPP 2023

Overall View on Rel-19 Content

S.NO.	Title	Brief Description and Key Objectives	Related Stage-1 Study/Work Item	Lead Stage-2 WG	RAN dependencies	Other WG dependencies
3.	**AI-enabled 5G System** (See slide 10 for more details)	Continuation of Rel-18 work to support enhancements to 5G Core intelligence, alignment and convergence between SA2 and RAN WG for UE data collection framework and ML model sharing. **Key Work Tasks includes defining -** 1. Enhancements to NWDAF to support policy recommendations and online learning. 2. UE data collection framework enhancement to support AI/ML use cases. 3. AI/ML alignment and convergence for Air interface and 5G Core network.	No	SA2	Yes	RAN for RAN aspects, SA3 for security, SA5 for charging
4.	**XR enhancements and Localized Mobile Metaverse Services** (See slide 11 for more details)	Continuation of Rel-18 work item and new stage-1 requirements on Metaverse. Compared to Rel-18 XR, the Metaverse services would involve coordination of input data from different devices/sensors from different users and coordination of output data to different devices at different destinations to support the same task or application. **Key Work Tasks includes defining -** 1. XR enhancements to enable “inband” PDU Set identification on N6 for RTP streams with encrypted RTP headers (continuation of Rel-18 XRM) 2. XR enhancements related to stage-1 requirements on Localized Mobile Metaverse Services (FS_Metaverse)	TR 22.856 (for WT#2)	SA2	No for WT#1 Don’t know for WT#2	SA3 for security, SA5 for charging

© 3GPP 2023

Overall View on Rel-19 Content

S.NO.	Title	Brief Description and Key Objectives	Related Stage-1 Study/Work Item	Lead Stage-2 WG	RAN dependencies	Other WG dependencies
5.	**Scalable SNPN Interconnect with dynamic connections** (See slide 12 for more details)	Scalable interconnect between Identity Providers and a large number of Standalone Non-Public Networks (SNPNs) using dynamic connections. **Key Work Tasks includes defining -** 1. Overall architecture and function enhancement to the N32 reference point to allow for scalable and secure on-the-fly establishment of signalling connection between a Standalone Non-Public Network and an Identity Provider, including in presence of Firewall functionality (related to FS_ISN; TR 22.848)	Yes; TR 22.848 (first use case only)	SA3	No	SA2 for alignment
6.	**Upper Layer Traffic Steering, Switching and Split Over Dual 3GPP Access** (See slide 13 for more details)	5G system support for steering, splitting and switching of user data, pertaining to a UE data session, across two 3GPP networks (single PLMN; two PLMNs; PLMN and SNPN). **Key Work Tasks includes defining -** 1. Support of dual registration over 3GPP accesses (single PLMN; two PLMNs; PLMN and SNPN). 2. Architecture for steering, splitting and switching of user data, pertaining to a UE data session, across two 3GPP networks	TR 22.841	SA2	No	SA3 for security, SA5 for charging

© 3GPP 2023

Overall View on Rel-19 Content

S.NO.	Title	Brief Description and Key Objectives	Related Stage-1 Study/Work Item	Lead Stage-2 WG	RAN dependencies	Other WG dependencies
7.	**Service-based N2/Nran interface (study only)** (See slide 14 for more details)	Study on 5G system enhancements to support a service-based Nran/N2 interface. **Key Work Tasks includes defining -** 1. Overall architecture for support of service-based Nran/N2 interface, including enhancements on 5GC side, impact on the binding, selection and reselection principles described in TS 23.501 clause 6.3, the impact on TNLA and AMF load (re-) balancing aspects described in TS 23.501 clause 5.19, the impact on persistence control of the UE-specific RAN-CN association (referred to as "NGAP UE-TNLA binding" in TS 23.501 clause 5.21), etc. 2. Procedures for establishment, update and release of a service-based interface between an NG-RAN node and the 5GC. 3. How to support UE-associated and non-UE associated signalling with a service-based Nran/N2 interface. 4. Investigate the migration and co-existence aspects for deployments where NG-RAN nodes supporting service-based Nran/N2 need to co-exist with legacy NG-RAN nodes.	No	SA2	Yes	RAN3 for N2 procedure aspects; CT4 for specific service-based interface aspects; SA3 for security aspects
8.	**Satellite Access Phase 3** (See slide 15 for more details)	Continuation of Rel-18 work item and new stage-1 requirements. **Key Work Tasks includes defining -** 1. Definition of Satellite Coverage Availability Information (SCAI) (leftover from Rel-18) 2. Architecture for provisioning of SCAI to 5GS or EPS by a 3rd party AF (leftover from Rel-18) 3. Operation with intermittent/temporary satellite connectivity for delay-tolerant communication service (Store and Forward data from satellite to UE communication, as defined in TR 22.865)	TR 22.865 (for WT#3)	SA2	No for WT#1, WT#2 Don't know for WT#3	SA3 for security, SA5 for charging

© 3GPP 2023

Overall View on Rel-19 Content

S.NO.	Title	Brief Description and Key Objectives	Related Stage-1 Study/Work Item	Lead Stage-2 WG	RAN dependencies	Other WG dependencies
9.	**Ambient Power-Enabled Internet of Things** (See slide 16 for more details)	5G system support for battery-free devices as needed to operate under extreme environmental conditions, to support maintenance-free device operation (e.g. no need to replace a conventional battery for the device), and to enable ultra-low complexity, very small device size/form factor and longer life cycle (*passive* devices with indirect communication only). **Key Work Tasks includes defining -** 1. Overall architecture and function enhancement to support new Ambient IoT service (e.g. enhancement to Rel-18 PIN). 2. Basic functionality and E2E procedure for Ambient IoT service exposure, Discovery and selection of the Ambient IoT entities, Authorization, Ambient IoT control parameter generation and provisioning, related QoS/Policy enhancement.	Yes, TR 22.840	SA2	Yes, Major	SA3 for security, SA5 for charging
10.	**Proximity Services enhancement**	Continuation of work on Proximity Services. **Key Work Tasks includes defining -** 1. Overall architecture for support of multi-hop Layer-3 UE-to-UE relay. 2. Support for Non-3GPP RAT (e.g. WLAN) over PC5 reference point for Layer-3 UE-to-Network Relay 3. Support for Non-3GPP RAT (e.g. WLAN) over PC5 reference point for Layer 3 UE-to-UE Relay	No	SA2	No	SA6

© 3GPP 2023

SWS-230014

Study on Integrated Sensing and Communication

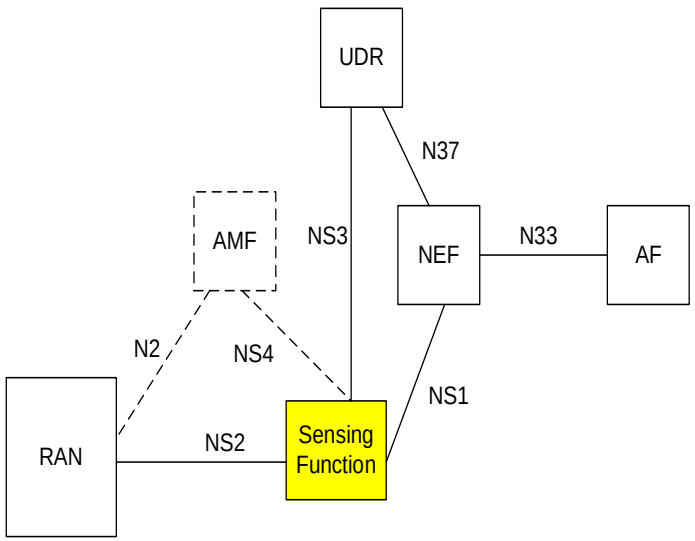

Architecture for network-based sensing

- **5G Wireless sensing**: 5GS feature providing capabilities to get information about characteristics of the environment and/or objects within the environment (e.g. shape, size, orientation, speed, location, distances or relative motion between objects, etc) using NR RF signals.
- Possible architecture for network-based sensing:
  - AF: Makes request for sensing (e.g. sensing type, geographical area, etc.); Collects the results
  - NEF
    - Authorizes the AF requests with the UDR
    - Finds a suitable Sensing Function based on the information in the AF request (e.g. geo area)
    - Relays messages between AF and Sensing Function
  - Sensing Function (new)
    - Maps the geographical area in the request to a set of gNB IDs (possibly taking service area restrictions into account) and forwards the sensing request to the selected gNBs
    - Collects input from gNBs, processes it and delivers a grouped response towards the AF (could re-use the same information for reporting to multiple AFs)
  - RAN
    - Receives sensing requests from Sensing Function
    - Performs the actual sensing on the radio
    - Delivers sensing results to Sensing Function
  - AMF: Relays messages between Sensing Function and RAN (in case there is no service-based Nran)

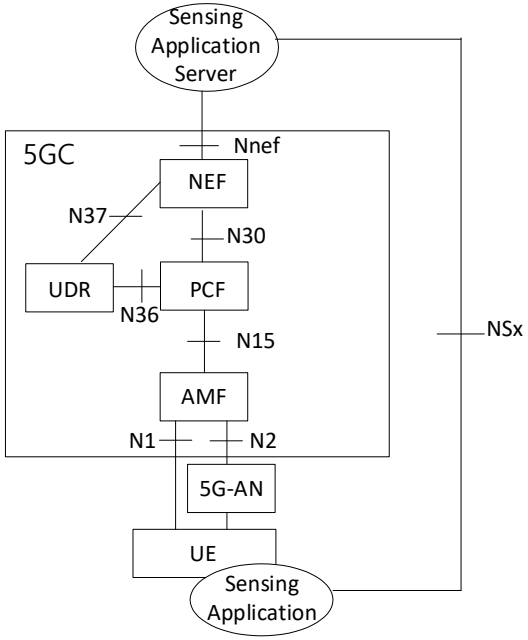

Architecture for UE-based sensing (based on V2X arch)

© 3GPP 2023

SWS-230014

Study on Edge Computing Phase 3

- Potential objective for study:
  - Further support for the case where there is no connectivity between the local Data Network and the central Data Network
    - Enhance DNS resolution for the case where the local DNS server has no connectivity with the central DNS server (i.e. Option C and D in TS 23.548)
    - Support the routing of Application traffic between the local DN and a cloud server located in the central DN
  - Support for additional EAS (re)discovery criteria (e.g. based on EAS load, EAS computing capacity, etc.)
  - Support of Edge Computing in the ETSUN scenario (i.e. in presence of Intermediate SMFs)
  - Localized control of Edge access (e.g. EAS (re)discovery/(re)selection, local traffic routing influence, local exposure, etc.) with less impact to existing 5GC network elements (i.e. AMF, SMF).

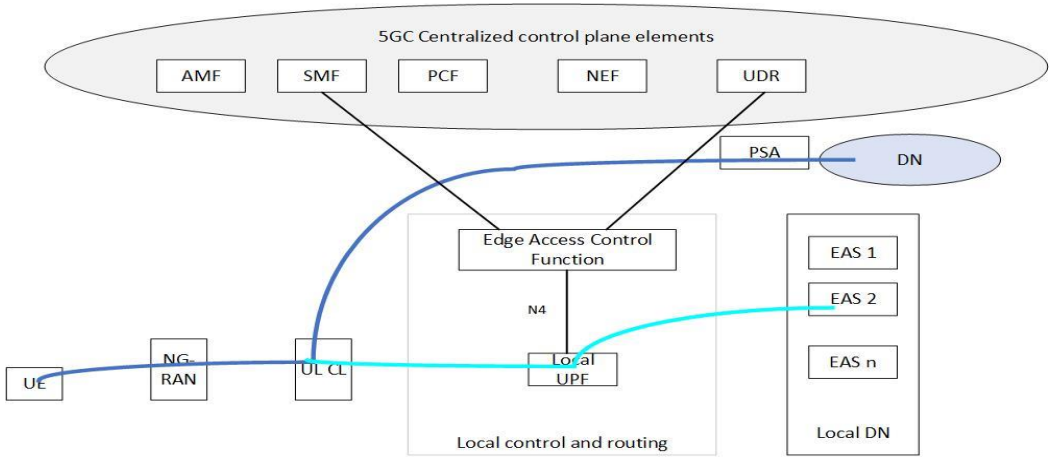

Localized control of Edge access

© 3GPP 2023

Study on AI enabled 5G system

- Enhancements to NWDAF
  - NWDAF assisted policy recommendations
  - Enhancements to ML model accuracy monitoring and Analytics accuracy monitoring
  - Support for online learning in 5GS
- UE data collection framework enhancement to support AI/ML use cases.
  - Harmonize UE data collection mechanisms (DCCF, DCAF, RAN data collection mechanisms)
  - Enhance architecture to support vertical federal learning (cross domain), including UE, RAN, 5GC and AF
- AI/ML alignment and convergence for Air interface and 5G Core network
  - Support for ML model sharing between 5GC, RAN and UE
  - SA2 and RAN WGs convergence for Model ID, Analytics ID / Feature ID, ML model interoperability
  - Enhancement to support ML Model delivery to UE – Model transfer format, CP/UP based signaling

© 3GPP 2023

Study on XR enhancements and Metaverse Services

- Study XR enhancements to "inband" PDU Set identification on N6 for RTP streams with encrypted RTP headers
  - Rel-18 focused on solutions for PDU Set identification when RTP/SRTP headers are not encrypted.
  - Two alternatives were under consideration for "inband" PDU Set identification on N6 with encrypted RTP headers (GTP-U based and MASQUE based), but neither was agreed
- Study XR enhancements related to SA1 requirements on Localized Mobile Metaverse Services (FS_Metaverse)
  - Compared to Rel-18 XR, the Metaverse services would involve coordination of input data from different devices/sensors from different users and coordination of output data to different devices at different destinations to support the same task or application. Support of Metaverse services may require:
    - Identification of users and other digital representations of entities (avatars)
    - Acquisition and exposure of local (physical and digital) information

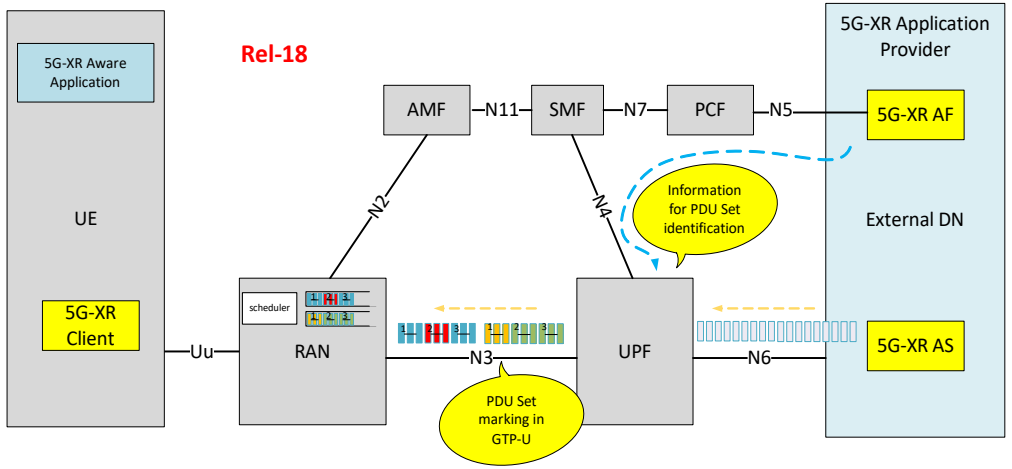

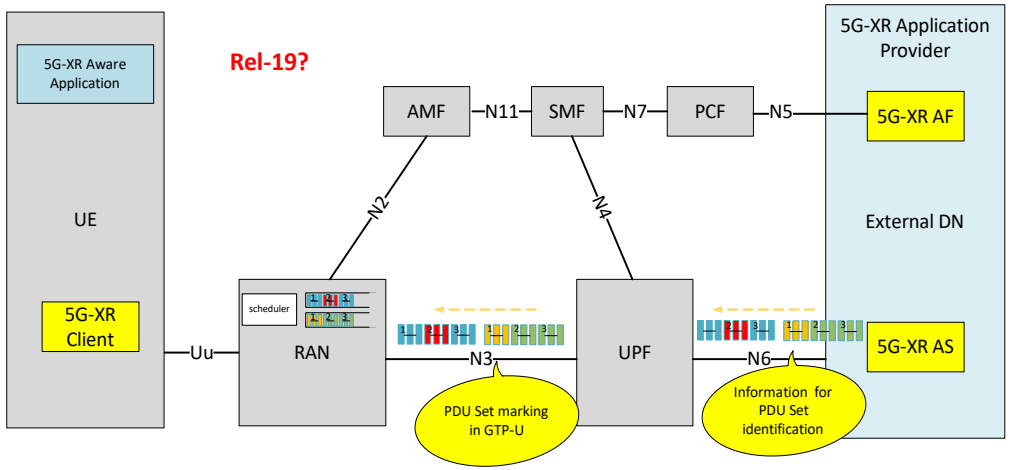

© 3GPP 2023

SWS-230014

Study on Interconnect of SNPN (FS_ISN)

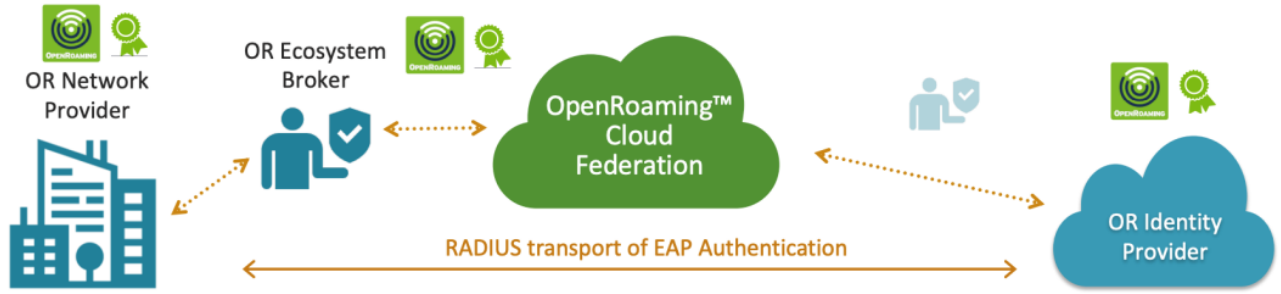

OpenRoaming Architecture (source: WBA Website)

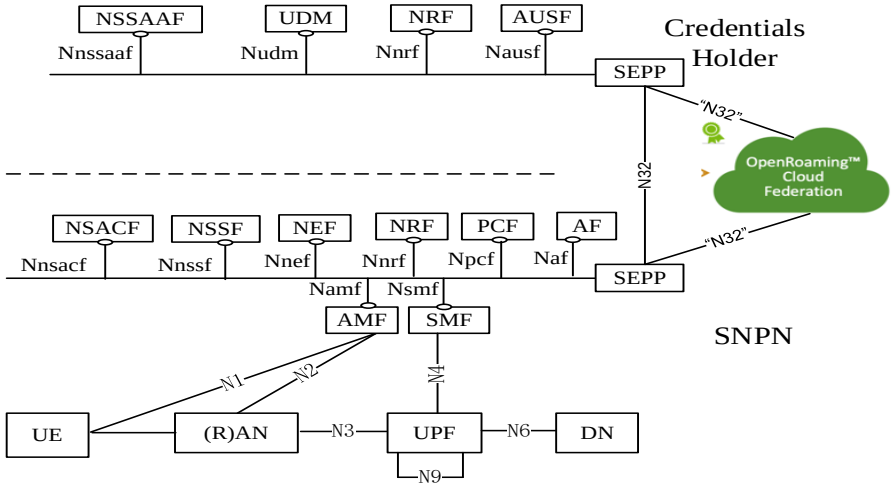

Enhancing N32 for scalability and leveraging WBA OpenRoaming™

- Intel expects that the part of the FS_ISN study related to the WBA OpenRoaming request (SP-220730) can be addressed as part of Rel-19
- WBA OpenRoaming™ provides technical and legal framework to support interconnection between Wi-Fi access networks and Identity Providers
  - Hugely successful; more than 1,000,000 entities have joined the federation
- Considering SNPN and Credential Holder in the role of Wi-Fi access network and Identity Provider, N32 enhancements are needed to cope with scalability
  - N32 reference point is currently designed using a long-lived connection between VPLMN and HPLMNs. This approach does not scale beyond, say, 1000 interconnect partners.
- Intel expects that N32 will be enhanced to
  - Cope with scalability for interconnect
  - Leverage the hugely successful WBA OpenRoaming™ framework
- Corresponds to the use case in TR 22.848 clause 5.1
- SA3 to be the leading WG

© 3GPP 2023

SWS-230014

Study on Upper Layer TSSS Over Dual 3GPP Access

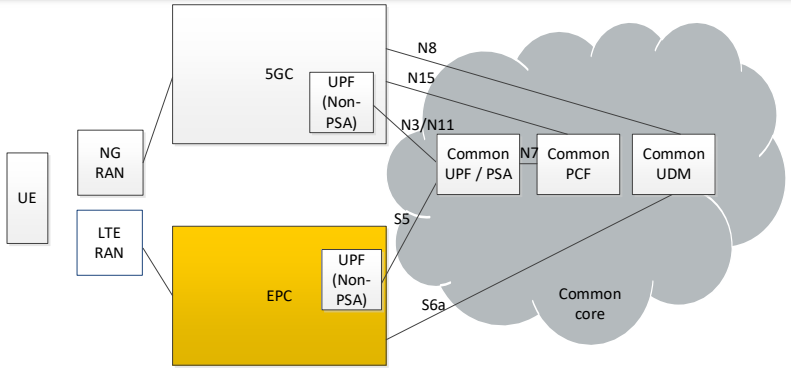

5GC-EPC interworking with Dual Registration (existing)

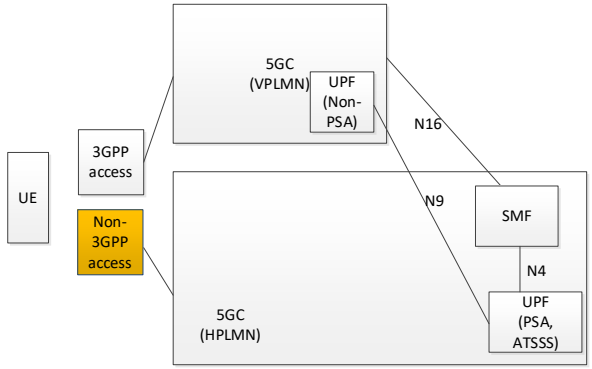

ATSSS (3GPP and non-3GPP access) (existing)

- Aims at defining 5GS support for steering, splitting and switching of user data, pertaining to a UE data session, across two 3GPP networks.
- The following scenarios are covered, where only one single PLMN subscription is assumed:
  - Single PLMN;
  - PLMN and NPN;
  - two PLMNs.
- Existing functionality bearing similarities
  - 5GC-EPC interworking with Dual Registration, but
    - Only one 3GPP access at a time for data transmission
  - ATSSS, but
    - Only one 3GPP and one non-3GPP access
  - Multi-USIM with dual radio UE, but
    - Multiple subscriptions

- Possible DualSteer architecture
  - ATSSS with two 3GPP accesses
  - Dual radio UE

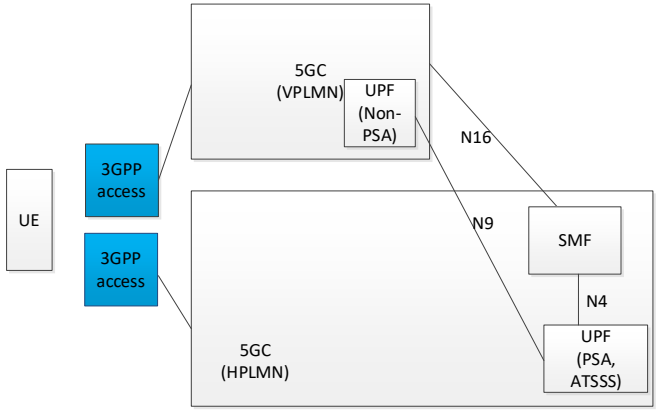

DualSteer architecture (ATSSS with two 3GPP accesses)

© 3GPP 2023

SWS-230014

Study on a Service-Based N2/Nran interface

- Study one of the following alternatives for a service-based N2/Nran interface
  - Alternative 1: study all aspects of a full-fledged N2/Nran interface, without necessarily initiating normative work in Rel-19
  - Alternative 2: study a service-based N2/Nran with reduced functionality e.g. to support new features, such as Sensing

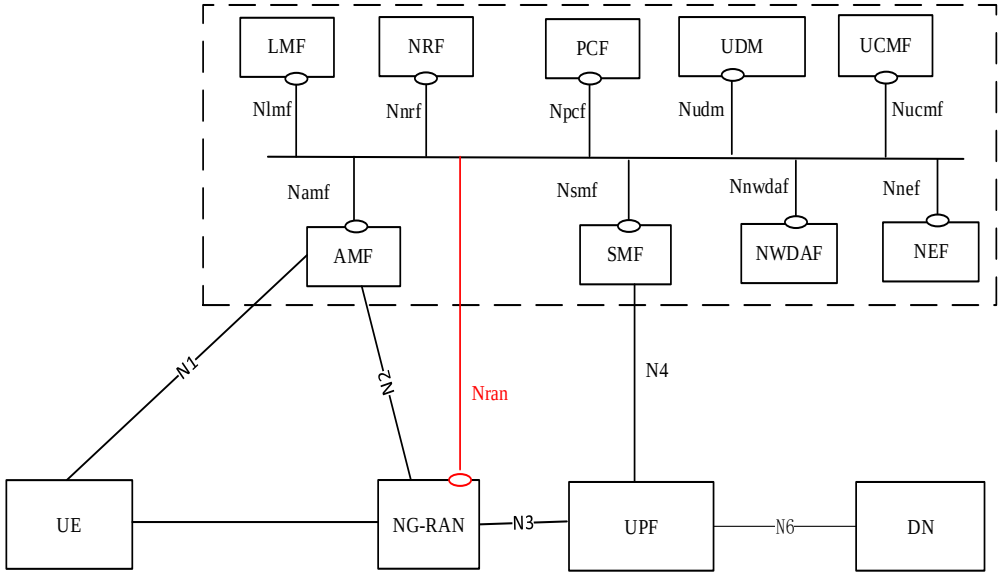

© 3GPP 2023

SWS-230014

Study on Satellite Access Phase3

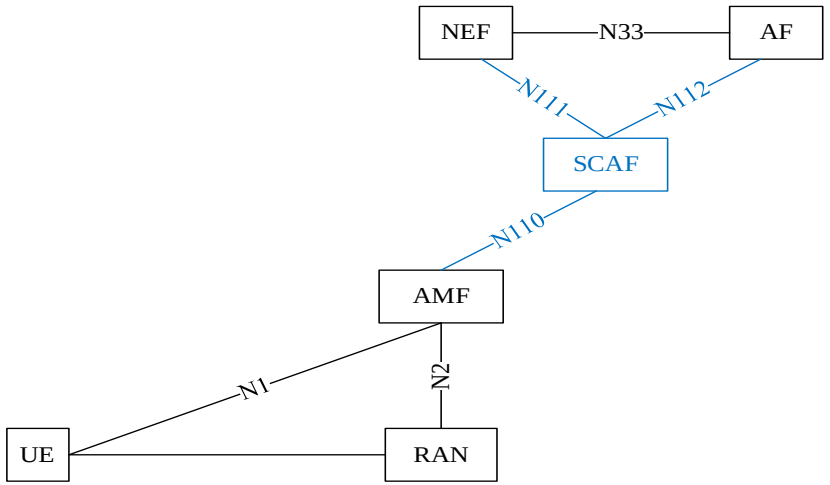

Possible SCAI provisioning architecture for 5GS

- Leftovers from Rel-18
  - Definition of Satellite Coverage Availability Information (SCAI)
  - Provisioning of SCAI to 5GS or EPS by a 3rd party AF
    - Rel-18 solutions is based on OAM
- Potential new requirements defined by SA1 for:
  - Operation with intermittent/temporary satellite connectivity for delay-tolerant communication service
    - Store and Forward data from satellite to UE communication

© 3GPP 2023

Study on Ambient Power-Enabled Internet of Things

- TR 22.840 addresses the need for battery-free devices as needed to:
  a) operate under extreme environmental conditions,
  b) to support maintenance-free device operation (e.g. no need to replace a conventional battery for the device), and
  c) to enable ultra-low complexity, very small device size/form factor and longer life cycle.
- The study specifies 30 use cases in the area of Health Care, Warehousing, Industry 4.0, Smart grids, Logistic and transportation, Smart Homes, Smart Farming & Agriculture
- Specifies service KPI for end-to-end latency, data rate, message size, transfer interval, mobility, and positioning/location
- Active and Passive modes of operation:
  - Passive mode with direct communication has potential impact on RAN/N2/AMF/NEF to enable reader mode (RF powered), collecting information from deployed sensors and delivering the collected information to third party AF (possibly similar architecture as for Sensing).
  - Active mode with direct communication is similar to RedCap devices with further reduction in capabilities
  - Passive/Active mode with indirect communication uses an intermediate UE as a relay (e.g. using a reduced version of PC5). Less network impact compared to direct communication. The operator is aware and can control the device.

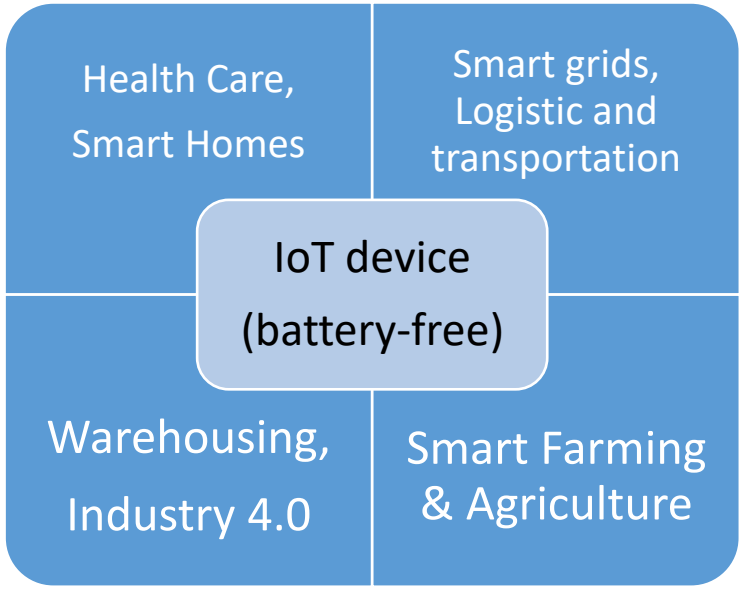

© 3GPP 2023

Summary

- Limit the continuation of items that have spanned across several releases (e.g. network slicing)
- Items that can be approved in SA#101 plenary should have no or minimal RAN dependency (e.g. EDGE Phase 3, XRM (partly), Traffic Steering, Switching and Split over Dual 3GPP Access, Satellite Phase 3 (partly), etc.)
- During Q3 of 2023 SA2 should focus on fine tuning of the SID/WID objectives, Work Tasks and associated TU budgets and leave the rapporteurship assignment for SA#101

© 3GPP 2023